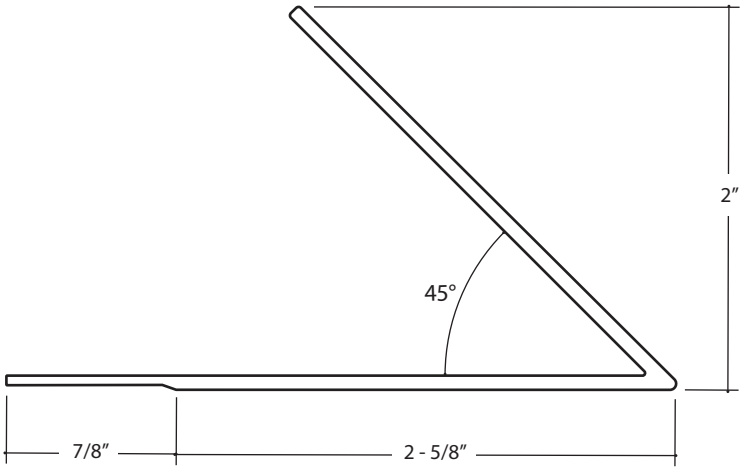

Flannery, Inc	Product Name: Drywall Key Edge	Product Number: DWKE 2625-200	Product Section: Interior / Aluminum Drywall Trims	Scale: 1” = 1”
	Contact: www.flannerytrim.com Ph. 682-207-2650		Product Notes:	Date: 03.04.24
	Web Link:		Product Specification: Alloy : 6063-T5 Typical Wall Thickness : .080	Page No.: 01 OF 01